Triangle Inequality Theorem

Subject Area(s)	measurement, number & operations, reasoning & proof, and science & technology
Associated Unit	None
Associated Lesson	None
Activity Title	Truth About Triangles

Header

Insert Image 1 here, right justified to wrap

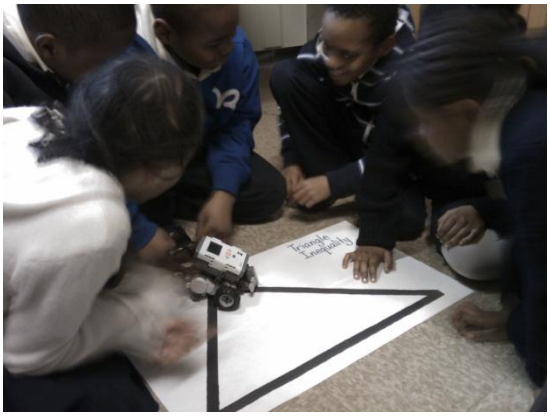

Image 1

ADA Description: students working on triangle inequality theorem activity

Caption: students discussing the sum of two sides of a triangle should be larger than the third remaining side

Image file name: Triangle_Students.jpg

Source/Rights: Copyright © Carole Chen 2009

Grade Level	5 (4-5)
Activity Dependency	None
Time Required	Two 45-minute lessons
Group Size:	4
Expendable Cost /Group	US$1
Summary	Working as a team, students discover that any side of a triangle is always shorter than the sum of the other two sides; known as the triangle inequality. Each team builds a basic Lego robot that is programmed to travel along a triangle. The triangle is made of electrical tape that is taped onto the ground. Students have to note that the time it takes for the robot to travel any two sides of a triangle (Case 1) is longer than the remaining third side of the triangle (Case 2). This is true given that for both cases, the robot is traveling at the same motor speed. From this activity, students learn of the parameters that makes a triangle a "valid" triangle; namely the triangle inequality theorem. At the same time, with the use of Lego robot, they learn of motor speed through the use of distance and time.
Engineering Connection	A triangle is simply defined as a shape that is made up of 3 angles and 3 line segments, known as its sides. Its role in our world, however, is not that simple. Triangles have been said to be the shapes of mathematics, science, and nature. The importance of this shape is seen everywhere around us. Triangles are used to help us measure heights

and distances. In fact, they are especially important to builders, architects, and civil engineers. These people rely heavily on the knowledge of how to make perfect triangles, otherwise sturdy architectural structures would be hard to find. This activity gives students an opportunity to learn a fun fact about this interesting geometrical shape in a hands-on way that allows them to discover using technology (Lego Mindstorms kit) and work as a team.

Engineering Category (3) relates math concept to engineering/the use of technology

Keywords build and design, triangle, inequality, endpoints, formula, line segment, program, software, units

Educational Standards

NYS Math: 5.PS.3, 5.RP.1, 5.CM.9, 5.R.2, and 5.G.3 [1]

Pre-Requisite Knowledge

Familiarity with measurement using a ruler, addition and subtraction, and the use of Mindstorms software

Learning Objectives

After this activity, students should be able to:

- Build and program a basic Lego NXT Robot
- Identify a "valid" triangle solely by assessing any given set of three values, which represents the sides of a triangle

Materials List

Each group needs:

- Lego kit
- Computer with Mindstorms software
- Measuring tape (capable of measuring up to 7 feet)
- Ruler
- Electrical tape of two different colors (preferably blue and red)
- Stopwatch
- Bag of spaghetti
- Staples
- Scissors
- Protractor
- Notepad and pen

Introduction / Motivation

We see squares, rectangles, and circles all around us. How about triangles? If we think hard enough, they are also all around us in nature. For example, the tip of a long leaf and flower [see Image 2]. In terms of architecture, the sides of the Egypt pyramids are made up of triangles and any three corners of every rectangular room. This is very important because without making sure that every three corners of a room yield a triangle with one angle of 90°, the whole room may not turn out to be a nice even square or rectangle.

Insert Image 2 here, justified

Image 2
ADA Description: triangles in nature
Caption: Image 2: none
Image file name: natureTriangles.jpg
Source/Rights: Copyright © www.gwinnett.k12.ga.us/LilburnES/05-06geometry/Team1/Triagles_t1.html

A triangle is a simple polygon that has three sides; hence it is also called a trigon (although it is less commonly known as that). In elementary geometry, we all learn the basics facts of a triangle. For example, we learn that the sum of a triangle's three angles add up to 180°. We also learn that there are many types of triangles based on the triangle's angles and lengths of the line segments that make up the three sides. Mathematicians have even categorized and named them accordingly. They are known as: right triangle, scalene triangle, equilateral triangle, and isosceles triangle. Each is unique in that a right triangle must consist of a 90° angle, a scalene triangle has no sides of equal length, all three angles of an equilateral triangle are equal to 60° (180° ÷ 3 = 60°), and an isosceles triangle has two sides that are equal in length. Then there are also obtuse and acute triangles; these terms are used to describe the angles of the triangle. An obtuse triangle refers to a triangle that has an angle that is greater than 90°, while an acute triangle refers to a triangle whose angle is less than 90°. Image 3 shows what each type of triangle should look like.

Insert Image 3 here, left justified

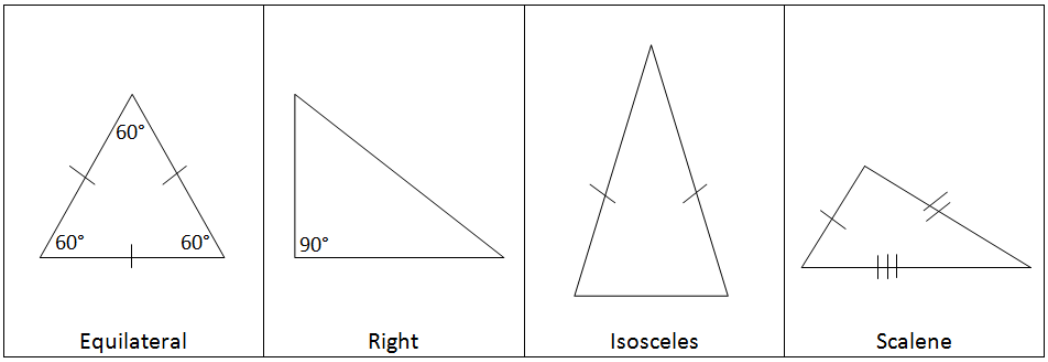

Image 3
ADA Description: different types of triangles
Caption: Image 3: none
Image file name: diffTriangles.jpg
Source/Rights: Copyright © Carole Chen 2009

Knowing all these facts, we still have not learned what values of a triangle constitute as a valid triangle. As most students may not realize, not any combination of three values (length of each triangle's line segment) can make a "true" triangle. This is when the triangle inequality theorem (the length of one side of a triangle is always less than the sum of the other two) helps us detect a "true" triangle simply by looking at the values of the three sides. Students can learn this important theorem from the following interactive hands-on activity which incorporates the use of technology (build and program a robot). On top of building and programming, they are also required to use reasoning and thinking skills to derive at the correct conclusion. Speed, distance, and time are involved. To show that two sides are longer than the remaining side, they are asked to measure the time it takes for a robot to travel two sides of a triangle and compare this to the time it takes for the robot to travel the remaining side. If the speed (rotation/time) of the robot's motors is kept as a constant for both cases, then it can be deduced that the case that takes the robot longer to complete (two sides of a triangle) is longer in distance, and hence is larger in sum than the faster case.

Vocabulary / Definitions

Word	Definition
Triangle	Three-sided polygon with 3 angles totaling up to 180°
Angle (θ)	Quotient of the arc-length of the circle and the radius
Speed	Distance divided by time – how fast are you traveling
Distance	The length traveled, can be measured in miles, feet, inches, centimeters, meters

Procedure

Before the Activity

- Gather all required materials
- Make sure all the Lego kits are complete with the parts properly divided
- Divide the class into groups of 4

With the Students

1. Discuss and go over the definitions of a triangle, angles and sides
    a. visit: http://www.mathopenref.com/triangleinequality.html and view this to the class
2. Define speed and its dependence on time and distance
    a. First define in words (sentence form): how fast you travel = the distance you travel divided by the time it took for you to travel that distance
    b. Then define in equation: Speed = distance ÷ time <=> S = d/t
    c. Hence, if the speed is kept constant, a change in the distance will cause a direct change in time. This relationship has a direct proportional change; meaning if one increases the other also increases if the speed is kept constant.
    d. Discuss, what if the speed is increased? What does that tell us about distance or time? [make sure that student only deduce the change for one variable at a time]
3. Hand out materials needed for pre-activity (spaghetti, scissors, ruler, and marker)
4. Have each group complete the pre-activity experiment, file is in Word docx or pdf format: Triangle_Pre_Activity_Worksheet.docx
5. Discuss and go over the pre-activity; make sure that students understand that a 3-4-5 dimension makes a valid triangle while a 2-4-7 dimension cannot make a valid triangle.
6. Hand out the remaining materials which are needed for the embedded activity (namely: Lego kits, measuring tape, computer with Mindstorms software, red and blue electrical tapes, and stopwatch)
    a. On a wide open floor space, have each group tape up a (3', 4', 5') right triangle using electrical tape – two sides of the triangle would be of one color, while the third remainder side would be of another color: for example: 3' and 4' are made up of red electrical tape while the 5' is made up of blue electrical tape. Note that this dimension is similar to the correct "valid" triangle's dimension from the worksheet, which was also a 3-4-5 triangle. The only difference here is that we measure in 3-4-5 feet instead of inches because the robot needs to travel in a much bigger unit to avoid minor errors. Also, by this point the students should be able to mention that in order to make a 3-4-5 triangle, one of the angles needs to be 90° - use protractor to check

7. Open up the Lego kit and find the instruction manual to build the standard robot chassis – titled Lego Mindstorms Education
8. In the lower level of the kit, look for the battery charger and re-chargeable battery package of the NXT brain – put them together according to page 5's (left side of the page) instruction and start charging the NXT
9. Go to page 8 of the manual and follow the building instructions (Step 1) up to page 22 (Step 17)
10. In order to attach a light sensor, follow building instructions on page 32 (Step 22) up to page 34 (Step 23). The robot should look like Figure 1.1
11. Turn on the NXT and use the "VIEW" → "Reflected light" function to measure the amount of light reflection, measured in %'s. This value shows how much of the light coming out of the light sensor is reflected back to the sensor. For a darker color, the value would be lower due to lower reflection and the opposite is true for lighter color
12. Select "Reflected light" (a red light should turn on from the light sensor) and measure the reflected light one by one by placing the robot's sensor on the blue tape, then on the red tape, and lastly on the floor (which is the value right next to the tapes). These values are important when programming the robot's light sensor to follow the tape. Note down the three different reflection values
13. Program the robot:
    - Create a new program file (named "followBlue") and use the tutorial for programming guide found on the right hand side of the Mindstorms software
        - "Robot Educator" panel → "Common Palette" → "17. Follow A Line" → "Programming Guide"
        - For motor's power, instead of 75 (which is the default value used by the program – lower it to 45). Do this to both motors (B & C)
        - Once the programming is done, it should be very similar to Figure 1.2
        - This program should make the robot travel only one side of the triangle
    - Create another new program file (named "followRed") and repeat the programming steps of "followBlue", the only difference is the reflection value that is being compared. Now, it is required to enter a reflection value that is in between the reflection value of the red tape and the floor. Make sure to keep both of the robot's motors (B & C) operating at the same power intensity as "followBlue" – 45 instead of the default value of 75. This is a way of ensuring the robot is traveling at same speed for both programs. [If the robot is given different power, then S is not a constant, and hence nothing worthy can be made out of the time the robot took to travel]
14. Run the programs one by one:

a. Use stopwatch to measure the time it takes for the robot to complete the distance of the blue tape (5' side of the triangle) and note down the time
b. Reset the stopwatch and measure the time it takes for the robot to complete the distance of the red tape (this time the robot will have to do a turn when it moves from one side of the triangle to the other – 3' and 4' sides. Note down the time

15. Discuss the findings with students. Sum up the "big idea": Σ(2 sides of a Δ) > 1 side of Δ

Insert Figure 1.1 here, left justified

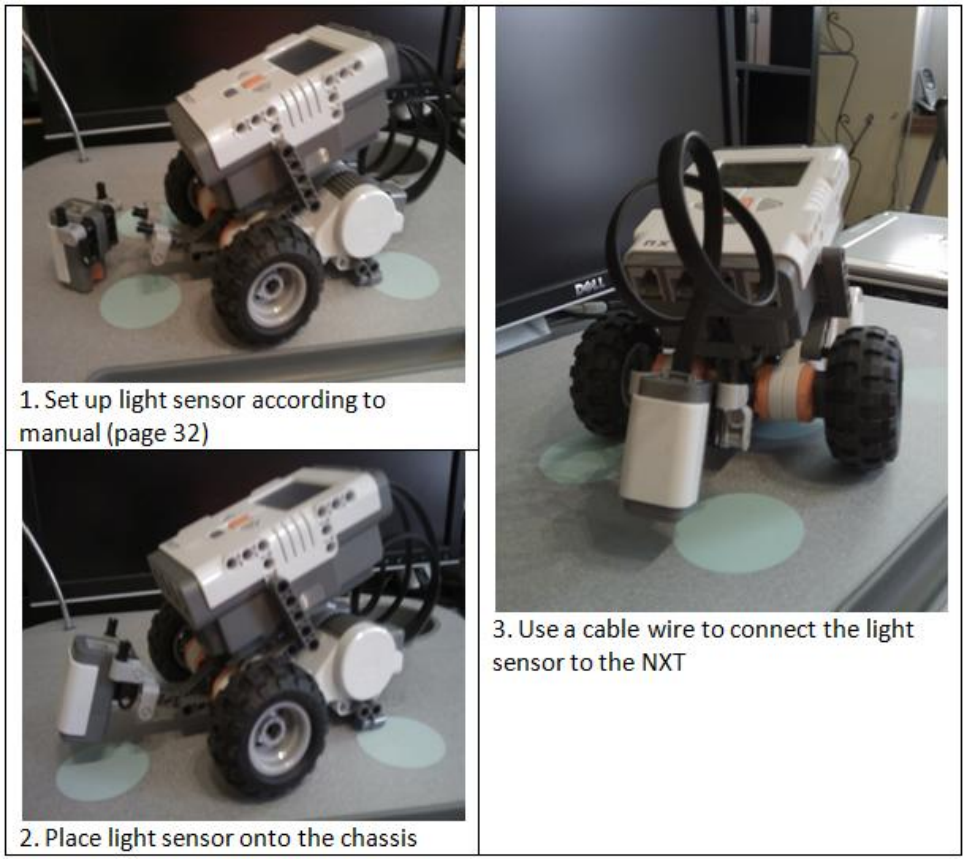

Figure 1.1
ADA Description: instruction on how to attach a light sensor onto the robot's chassis
Caption: Figure 1.1: follow steps 1 through 3 in the figure
Image file name: instruction.jpg
Source/Rights: Copyright © Carole Chen 2009

Insert Figure 1.2 here, left justified

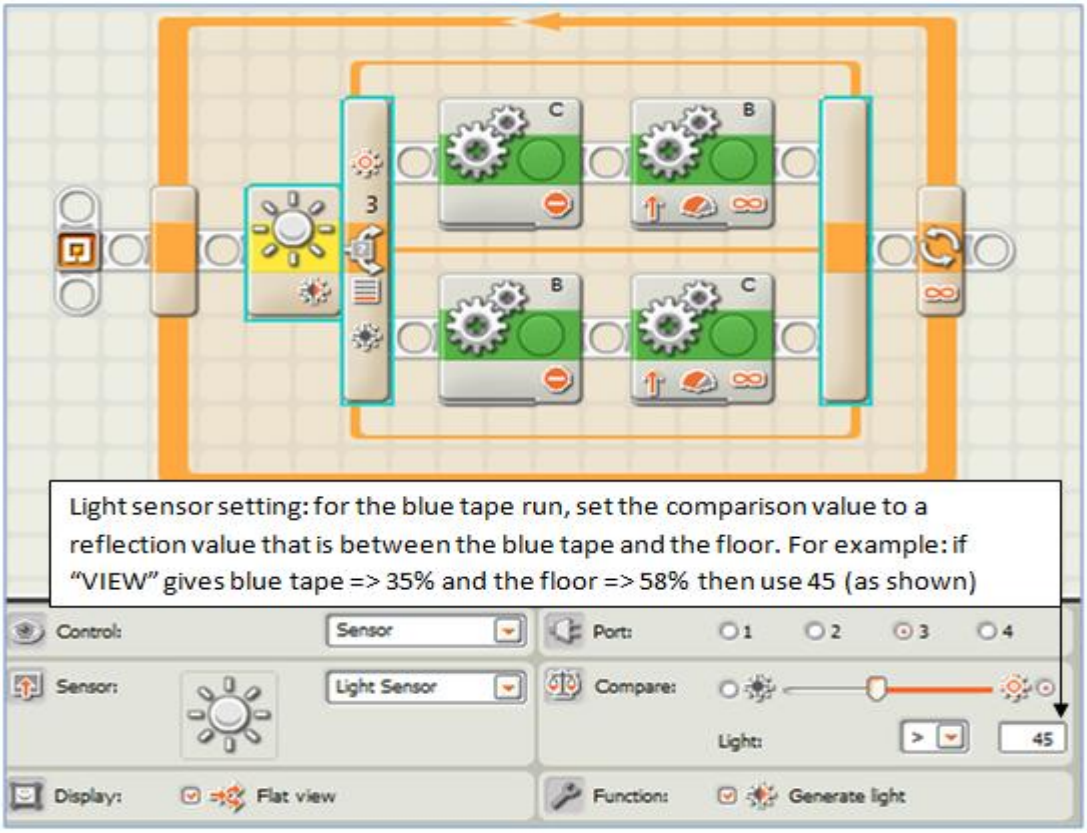

Figure 1.2
ADA Description: follow blue tape
Caption: Figure 1.2: follow the instruction/values to program robot to follow the blue electrical tape (one side of the triangle only –> 5' side)
Image file name: followBlue.jpg

Attachment

- Triangle_Pre_Activity_Worsheet.docx (available also in pdf)

Troubleshooting Tips

- If robot does not travel the point turn as programmed, make sure that the surface of the ground is completely flat and that the reflected light percentage is accurate. Try using the "VIEW" function again to recalibrate the reflected %. This value may change due to different light setting in different rooms
- If the robot misses quite a bit of distance when traveling along the red tape (2 sides of the triangle) when it turns, try having the robot travel along one side at a time – by manually removing the robot once it finish one side and abort the program by pressing the gray rectangle button on the NXT. Remember to record the time it takes for each side individually and accurately – the time it took for the robot to finish each side. Then sum up the two values.

Assessment

Pre-Activity Assessment

Spaghetti Triangles:

Which of the two dimensions gave a "true" triangle? Why? What type of triangle is the "true" triangle?

Activity Embedded Assessment

Blue or red: which is the winner?

Ask students to guess which route will take a shorter amount of time to complete. Explain their reasoning.

Post-Activity Assessment

What's the "Truth About Triangles":

Aim to get the "big idea" out of students; i.e. sum of any two sides of a triangle is larger than the remaining third side. Use the time it took the robot to travel two sides of a triangle and compare this to the time it took for the robot to travel one side. Which path/colored tape took the robot longer? Why? Is it because the robot moved at a fast speed? Or is it because the distance was longer? And what does this tell you about the triangle? [Valid or invalid?]

Activity Scaling

- For upper grades, create valid triangles of different sizes and angle, and repeat the activity where two robots will travel the same triangle at the same time. For example, Robot A will travel the blue tape (1 side) and Robot B will travel the red tape (2 sides), see which robot can finish first or did they finish at the same time – given that both robots are moving with the same motor power.

References

[1] www.nysed.gov

[2] Weisstein, Eric W. "Triangle Inequality." From *MathWorld*--A Wolfram Web Resource. http://mathworld.wolfram.com/TriangleInequality.html

[3] Mindstorms Education instructional manual in kit #9797 – item #4297091

Redirect URL http://gk12.poly.edu/amps-cbri/

Owner Carole Chen

Contributors Carole Chen, Mengyue Xiang